RTTY

NEWS OF AMATEUR RTTY

MAY 1954
25 Cents
Vol. 2, No. 4

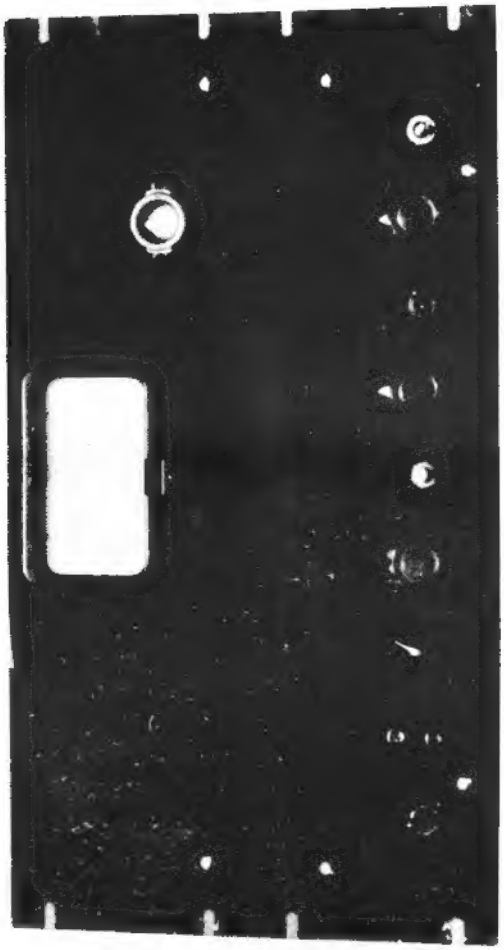

Frequency Meter Terminal Unit

By CECIL CRAFTS, W6ZBV

HORSE TRADES

This page of the Bulletin is for use of amateurs who who have RTTY equipment for sale or trade and those looking for equipment to buy or trade. It is afree service and may be the means of getting someone on the air.

FOR SALE—Model 12 with Terminal Unit (Torroids) all electronic keyer, padded cover, box of paper .. W6IES
FOR SALE—Excellent Model 12, table and polar relay W6TT
FOR SALE—Sunc Motors for Model 26 ..... H. & R., Phila
FOR SALE—Governor Motor for Model 12 ..... W8DXM
WANTED—Sync Motor for Model 12 ..... W6HFK
WANTED—Keyboard for Model 19 ..... W6AEE
FOR SALE—Model 12 less keyboard W6HFK
FOR SALE—Complete Converters (T. U.'s) W6CAP
FOR SALE—Twenty-five RA-87 Rectifiers for TTY .. W6ITH
FOR SALE—Model 12 complete with keyboard W6DOU
FOR SALE—Model 12 less keyboard W5VJP
WANTED—Sync motor for 12, bell and single space gear for Model 12 ..... W7HPH
WANTED—Model 15 Sync Motor and casting for for Model 15 keyboard or complete keyboard W6KGS
FOR SALE—Model 12 Keyboard and Printer, also Sync Motor for Model 12 ..... W6KGS

RTTY SOCIETY OF SOUTHERN CALIFORNIA
3769 East Green Street
Pasadena 10, Calif.
Return Postage Guaranteed

FSKing a Collins 32V Transmitter

By R. Weitbrecht, W9TCJ and Frank Azevedo, Jr., W6ZNU

The Collins 32V series of transmitters use sealed unit permeability tuned oscillators (PTO's) using an electron coupled circuit with 6SJ7 type tubes. These oscillators have excellent stability and would be ideal for use in RTTY work if provision was incorporated for frequency-shift keying them. The only catch is that these units are completely sealed up, hermetically and electrically, except for power input and r-f output connections. It is important to note that a drying agent is incorporated in the unit, consisting of a glass bulb with a colored material inside. Hence, to preserve the hemetic seal, any proposal to open the unit for internal connections must be viewed with concern.

An excellent method of FSKing an electron-coupled oscillator is to connect a diode modulator to the cathode tap on the grid coil. This is one of the most popular methods of achieving FSK and has been described in detail in various places[1, 2]. In application to the Collins PTO, it is possible to get at it's cathode tap without opening up the chassis, simply by connecting a wire to the cathode pin on the 6SJ7 tube itself. Here we need to take care because the 6SJ7 tube is inside a hermetically sealed tube shield can. However, to facilitate tube replacement, this can is easily removable, by removing four screws holding the flange of the shield can to the oscillator chassis and lifting the former off. The oscillator tube is thus exposed and can be pulled out.

Locating the cathode pin of the seated 6SJ7, a point marked in the crook between the vertical wall of the shield can and its flange so that this point is directly above the cathode pin. A very small hole is drilled at this point, this hole being just large enough to pass a thin plastic insulated wire through. One end of this wire is soldered directly to the 6SJ7 cathode pin at a point well up on the pin close to the tube's base so the tube can be easily put back into it's socket. The wire is threaded through the can and the latter is slipped down over the tube, fitting the wire carefully as the can is seated. When it is certain that everything fits, the four screws can now be put back in the hole area (also the tube shield can flange area) covered up with Duco cement to preserve the hermetic seal. The cathode tap is now accessible and can be directly connected to a diode modulator circuit assembled upon a small sheet metal shelf fastened nearby in the transmitter oscillator compartment.

The circuit used at W6ZNU is substantially identical to the one described in reference (1), with the addition of a clamping diode so that the whole circuit may be directly (without polar relays) by the complete terminal unit[3] described by W6NRM/W9TCJ. As shown in Figure 1, the circuit uses a 6AL5 duo-diode tube, a NE-48 neon lamp, a potentiometer, a R-C filter network, and a good quality trimmer capacitor all mounted upon the small shelf. One of the diodes is connected into the neon lamp so both diode and lamp forms a clamper. This prevents the signal d. c. voltage from swinging more than the operating voltage of the neon lamp, thus stabilizing the frequency shift. In other words, the voltage output from the terminal unit "FSK diode driver" is allowed to swing between zero (ground) and the maximum positive value limited by the drop across the NE-48.

The limited voltage signal is fed via a shift-adjusting potentiometer into the R-C network which function is twofold. One purpose is to shape the square wave forms of the teleprinter signal so a some what softened waveform is had, thus conductive to causing a minimum of clicks around the channel. The other purpose is to isolate the circuit for r-f and contain it where it belongs.

In order to affect the original calibration on the PTO as little as possible, the shelf carrying the modulator must be placed close to the 6SJ7 oscillator tube can so that the cathode tap wire is as short as possible. A suitable fastening method is to use a long screw run through the shelf and inserted into the space between the two round condenser cans immediately behind the PTO unit. A strap on the other side of these two cans serves to hold the other end of the long screw. In this way the shelf can be fastened firmly and yet the circuit is accessible for connection and adjustment. A grounding wire is connected between the modulator shelf and the PTO unit case. Also is some cases it may be desirable to use a shielded wire for the d. c. signal voltage between the terminal unit and the modulator circuit to prevent r-f pickup troubles.

The diode modulator itself is the other half of the 6AL5 tube, together with the trimmer capacitor which is in turn connected to the wire from the cathode tap of the oscillator. Having the shift-adjusting poteniometer set at maximum (voltage fed directly into R-C network from input), the trimmer is adjusted for a 850 cycle shift on the lowest frequency amateur band for RTTY use. For the higher frequency bands, the shift will be wider due to frequency multiplication and hence must be readjusted. The aforementioned potentiometer is used for this purpose, and it is turned down until the correct shift is obtained on any given higher-frequency band. The various settings of this control can be noted for the various bands and then it is a simple matter to adjust the shift after each band-change in the transmitter.

Of course, the diode modulator circuit may be keyed with a polar relay, if such is necessary with other terminal unit designs. The contacts should be connected between the plus 60 volts from the NE-48 lamp and the input to the R-C network (via the potentiometer). Alternatively, the clamping diode and its NE-48 lamp may be left out and voltage fed directly from external regulated source into the R-C network via the polar relay contacts.

Power for operating the 6AL5 heater and the NE-48 lamp may be obtained directly from the terminal unit over the signal cable (multi-wire), or from the Collins power supply. Either is as good as the other; the former method is easiest as it is not necessary at any time to remove the Collins rig from its cabinet.

Certainly, the above circuits could be used with any VFO, whether ECO, Clapp or other. The function of the diode modulator is merely to switch in or out automatically a small capacitor of a certain size so as to cause the desired frequency shift for RTTY use. In the case of the Clapp, a good attachment point is the cathode of the oscillator tube. In any event, a connection may be made to the grid (hot) end of the VFO coil with a very small trimmer capacitance in series as the shift will be quite large otherwise.

A special note is inserted here if this whole circuit is to be used with the complete terminal unit (W6NRM/W9TCJ) described in reference[3]. The d'agram there (page 9) did not show a power supply for supplying a negative potential of 165 volts for energizing the neon lamps in the terminal unit flipflop circuit. This power is presently obtained from an external source; however the spare half of the 6SN7 tube may be used as a shunt rectifier together with a simple RC filter to yield the desired negative high voltage (voltage value not critical, about 165-200 volts will be all right). AC power for this circuit is fed

through a condenser from the secondary of the power transformer in the converter. Also shown in Figure 1 here is a circuit of this supply unit which is very useful for bias source, etc., where a small current load is involved.

Referances

[1]R. Weitbrecht, "The Useful Diode Modulator", CQ—April 1952

[2]W6ZH/K6EV, "Method of Frequency Shift Keying Crystal or Variable Frequency Oscillators", RTTY—April 1953

[3]R. Weitbrecht, "Little Gems from Electronic Surplus", RTTY—April 1953

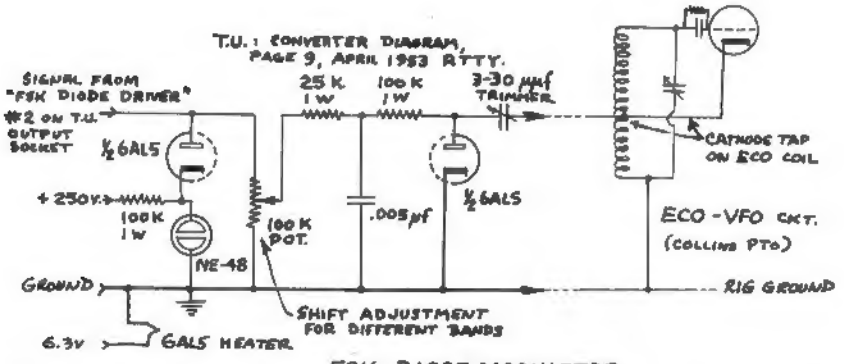

FSK DIODE MODULATOR

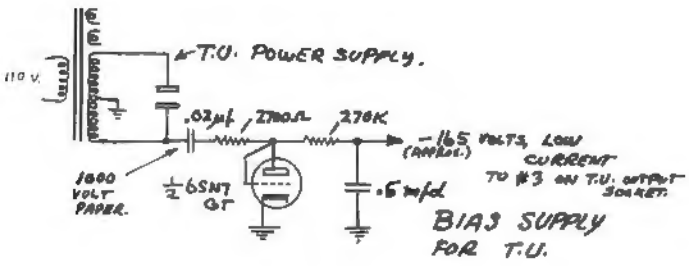

Frequency Meter Terminal Unit

By CECIL CRAFTS, W6ZBV

On reading the article by W2JAV, Phil Catona, in the Feb. '54 issue of RTTY, and being in the process of laying out a new terminal unit, the writer was struck with possibility of incorporating the frequency meter as an integral part of the TU, thus having available in an operating condition, means for checking shift at all times during operation. Also, by bring out the Freqency Meter input terminals, the unit could still be used directly for test purposes.

At the start it was decided that since extra ranges could be added at the expense of a few more switch contacts, and that since the frequency meter would also be used for test purposes, a more complete range coverage would be included, covering 0-500 cps, 0-1Kc, and 0-10Kc. Also, since the W2JAV method of checking shift was to be included, and since a shift of over 1Kc is unlikely, that the 0-500cps range would be used for this purpose, effectively giving a more expanded scale and presumably, higher accuracy of measurement.

About this time there appeared on the local market a limited supply of 500 cps low pass filters, adding a strong argument for the 1Kc maximum on shift measurement. Also, for economy of power supply, it was decided to try to make the unit work from a single VR-105.

A partial schematic of the terminal unit is shown on pages 8-9. Since with one possible exception, there was nothing particularly noteworthy about the normal TU section, it is shown in block form. The frequency meter section can be incorporated into any of the popular terminal unit circuits.

The operation of the basic frequency meter circuit is as follows; VI is a straight fairly high gain two stage amplifier to provide a large enough signal to drive V2 properly. V2 is a direct coupled Schmidt trigger circuit. This circuit has two stable conditions, depending on the voltage on the input grid. At any voltage below the critical point, which in this case is set up by the 100K and 82K voltage divider, the first section of the tube is cut off, due to the large common cathode resistor, and the second section is saturated since its grid is coupled directly thru a 300K resistor to the plate of the first section. If the voltage at the first grid is raised above the critical point, the circuit changes very rapidly to the other stable condition with the first section saturated and the second section cut off. Hence, with a sine wave input signal of sufficient amplitude, the trigger circuit output is a square wave with very nearly constant rise and recovery time regardless of input frequency. The square wave is then differentiated by the coupling capacitor to the next stage, V3, which is a cathode follower providing a low impedance source for the meter circuit. This drives a votage doubling rectifier circuit which supplies the D.C. for the meter. The meter used in this case is a 50uA unit which at one time was available on surplus in some quantity. However, meters up to 200uA have been used in the circuit quite satisfactorily with some modification of the calibrating potentiometers.

The "shift" section of the unit consists of a 2550 cycle oscillator, dual triode mixer, 500cycle low pass filter and an amplifier stage. The phase shift oscillator used here has proven to be very stable and dependable. One half of a 12AT7 used for this purpose. The other half is used as an isolating amplifier. The 2550 cycle output from this stage is fed to one grid of the 12AU7 dual triode mixer. The other mixer grid is

driven by a signal from any point after the TU limiter and before the filters. The amplitude of this signal should be adjusted for maximum difference frequency output. The signal from the mixer is fed into the 500 cycle filter. The filter actually used in the unit was an Acme S-381, however, the low pass filter described by W2JAV, made from FL-8 parts should also do an excellent job. The output of the filter, which is the difference frequency between 2550 cycles in each case if the tones are correct, is amplified and fed to the input of the frequency meter when the function switch is in the "shift" position. The writer has found that in the time the unit has been used an the air, including 2 meters AFSK operation, that the unit is almost always in the "shift" position, since the best accuracy is obtainable. With a little mental arithmetic, the exact tones of an incoming signal may be read by adding or subtracting the difference between 425 cps and the meter reading from 2125 or 2975 as the case may be. For instance if a Mark signal is being received and the meter reads 400 cps, the Mark frequency is 2125 plus 25 cps or 2150 cps.

Another position of the Function switch feeds the AFSK signal directly to the frequency meter input and the tone frequency may be read directly on the 0-5Kc scale.

The last position on the Function switch feeds 120 cps from the power supply to the frequency meter input for calibration. In the writers unit, the "calibrate" potentiometer for the 0-500 cps range was brought out to the front panel so that this more used range could be checked frequently.

Calibration requires an accurate audio oscillator or a frequency source known to be accurate near mid-scale on each range. The calibration potentiometer for each range is adjusted at a frequency near center scale. The 2550 cps oscillator may be set easily by feeding an accurate 2125 cps or 2975 cps signal to the TU input with the function switch on "shift" and adjusting the 2550 cps oscillator until the meter reads 425 cps on both tones.

The other feature of the unit which might be of interest is the indicator. While the writer has found himself using the meter for tuning, an auxiliary means is handy. Owning only one "two inch" scope tube and almost always with at least two terminal units under construction, the writer be-an a search for an inexpensive indicator. A result to the search arrived in the 6AL7, a tuning eye tube used in a number of FM receivers. The price is quite low and the interesting feature of the little tube is that it has three control electrodes. These are so arranged that if a positive voltage is applied to pin 4 the "eye" closes vertially in section A, to pin 5 section B, and to pin 6, section C. Two sets of 1N38 diodes were set up in a manner similar to the TU discriminator, with the exception that both pairs produce a positive output voltage. One fed by the output of the Mark filter and the other by the Space filter. The D.C. output of the mark side was fed to pin 4 and space to pin 6. Thus when a Mark signal is received, section A closes and on space, section C closes.

Again in a manner similar to the TU discriminator, two 500K resistors are taken from each of these two points and the junction of the two is fed to pin 5 which closes section B with when a Mark or Space signal is being received.

To tune in an FSK signal, if the received signal is resting on Mark, tune for maximum closure of section A and B. If the outside station is sending, tune for minimum flicker of section B.

Above 4v RMS is required to drive the indicator, so in most cases, an attenuator will be required at the input to avoid overdriving the circuit.

While at first, it may seem a bit more difficult to use than the usual 2" scope indicator, after some use it will be found that tuning is very nearly as satisfactory with the 6AL7, as with the scope.

CIRCUIT DIAGRAM ON PAGES 8 - 9

Dear Mr. Swan:

I should be very pleased to let you have all the information I can on RTT in this country, but as I stated, as far as I know I am the only amateur operating this equipment.

We are authorized to use F-1 on any of our bands here, but unfortunately I am not permitted to use it until next July, as I have only held a ticket for nine months.

Your bulletins are of the greatest interest. One never sees anything in the British Radio Press about RTT or morse machines or equipment.

I am not happy about my TU Unit (ex-government two- tone equipment). I am having considerable difficulty in stopping the Relay ruining the incoming signal with interference. I have tried various filters across the contacts without success; can you help?

There seems to be a spate of Government selling over here recently and there is a lot of British equipment about; this is mainly radio. The only RTT equipment is that there is a lot more No. 3 Creed machines; these are not suitable for Radio. They are an old post office pattern, and are available at anything from $10 upwards.

There are also a few British/U.S. teletype adaptors around for $4. As you probably know you can work an American machine together with a British machine with these.

There are some Creed 27 Relays around; these about $10. I have purchased one to try; they look a very good job.

If there is any technical information about this Creed equipment you require, please let me know.

Where is it possible to get a circuit diagram of a good TU Unit.

I suppose you know that the No. 10 Creed is a tape machine and the No. 7 is a page machine. The 7B is the standard machine here, and they are occasionally offered for sale. They are bought by commercial users, which are mainly newspapers,, and large firms or by traders who sell them abroad, mainly to British Colonies; hence the amateur doesn't get a look in, only at a high price.

I look forward to receiving your bulletin. I have lots of friends in California, as I am in the film trade and was over there in 1939.

Yours very truly,

—H. HARRIS

RYRYRYRYRY

"I am planning on building W2JAV's Deviation meter as my next RTTY project I needled him into designing it I believe and now it is no more right that I build one -Hi."

—Howard, W3LMC

RYRYRYRYRY

"Am on a 3 months business trip around the world-Pakistan, India and Japan. I will try and see you on the way back if I can get near Pasadena."

—Bill Auld, W2DXD

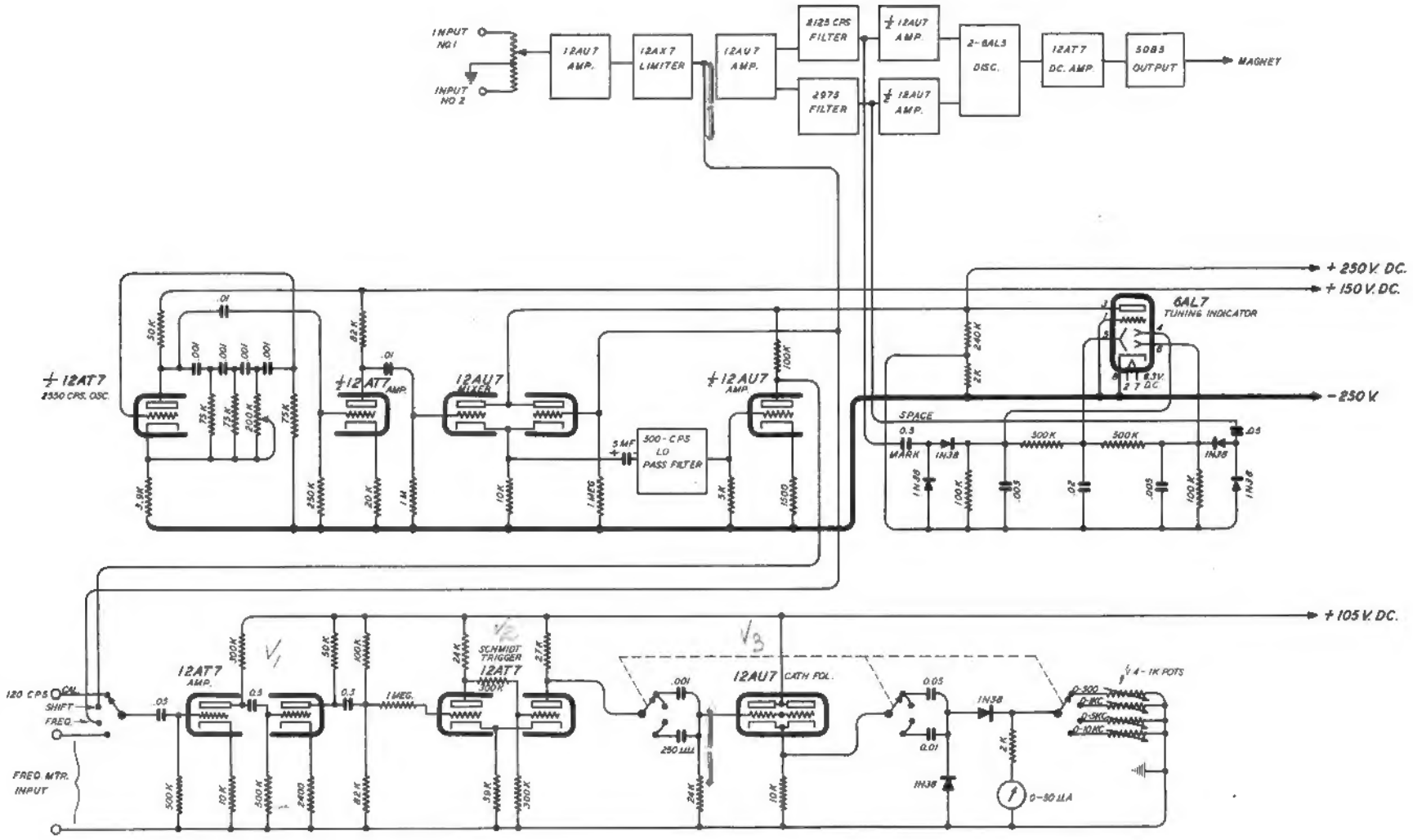
INPUT NO 1
INPUT NO 2
12AU7 AMP.
12AX7 LIMITER
12AU7 AMP.
2125 CPS FILTER
2975 FILTER
12AU7 AMP.
12AU7 AMP.
2-6AL5 DISC.
12AT7 DC. AMP.
5083 OUTPUT
MAGNEY
+250 V. DC.
+150 V. DC.
6AL7 TUNING INDICATOR
-250 V.
12AT7 2550 CPS. OSC.
12AT7 AMP.
12AU7 MIXER
12AU7 AMP.
500-CPS LO PASS FILTER
SPACE
MARK
+105 V. DC.
120 CPS
CAL.
SHIFT
FREQ.
FREQ. MTR. INPUT
12AT7 AMP.
SCHMIDT TRIGGER
12AT7
12AU7 CATH FOL.
4-1K POTS
0-50 μA

"Thought you might be interested in RTTY happenings in Louisville. W4OYG dismanteld his rig last week. He is doing a remoldeling job on his house (rather having it done) so he will be quiet for a while.

I am working on a signal light to be turned on when the carriage reaches 3 spaces from the end of the line. It will be mounted on the cover right over the keyboard."

—73's Bob, W7HPH

Good idea—Ed.

RYRYRYRYRY

"At present, I am looking around for some teletype equipment and wonder if you can furnish me info with regard to what is available along with prices and delivery. Any technical information, schematics, pictures etc. will also be appreciated."

—73's Wilbur E. Goll, WØDEL

See Horse Trades Section. Also your Ed was surplus shopping the other day and saw model 26's for $75.00 each at G. L. Electronics in Los Angeles.—Ed.

RYRYRYRYRY

"W5 QHB also has a model 15 and a ART-13 about ready to put on the air on 75 or 40. So we might be able to work you fellows soon. I have a model 19 and also a model 14, so you see I don't need any more stuff, or I will have to get rid of my Kilowatt rig."

—Bob, W5VJP

RYRYRYRYRY

"Regarding the suggested sked, I shall have to get permission to work on 150 watts, and I am doubtful whether I shall get it by July, however I will try."

—H. Harris, G3JNG, London

RYRYRYRYRY

"During the latter part of June, I am moving to join the staff of Purdue University as an associate professor of structural engineering."

—Al, W6NYI

"I am also enclosing some information concerning our Westrex DIVITEL and Frequency shift which you may find of interest since this is the equipment I am using on W2ATQ. My station is, at the moment, quite inactive due to other activities which are occupying most of my time."

—73 W. Grosselfinger, W2ATQ

RYRYRYRYRY

"I have obtained a model 26 machine so you can eliminate my name from the waiting list for your 26s. I was to so advise if I was able to obtain one locally. According to the NY bunch. They have purchased all of your machines and resold them."

—Harry, W8LEX

Sorry 'taint so. RTTY places machines with users only, not thru any group—Ed.

RYRYRYRYRY

"For over 30 years I am working for the Pacific Telephone & Telegraph Co., 18 of which I installed and repaired teletpye machines. Also, if possible, can I have the names and addresses of those now owning TTY machines in the Bay Area? I may be of some help to them, in repairing their machines."

D. L. Brock, 1416 Santa Clara Ave.
Alameda, California

Fellows this is the spirit which makes Amateur Radio click—Ed.

RYRYRYRYRY

"Thanks for the tip on W3UWM, I know Ken as he lives about 4 miles from me and I worked him on SSB until he obtained his machine. The town of Broughton has a population of about 2500 and is 10 miles south of Pittsburgh."

—Frank, W3MHD

Let the others know your are on TT—Ed.

"Don't know all the poop on the Fla. gang yet, as far as I know, W4RTJ and W4GXL (who is rebuilding to a KW) are on in Jacksonville, and some more working on it, with possibility of W4SDN getting on some day, may be! I have also been on from the club station at the University of Florida—W4DFU. I have several converter ckts that I like and some of the boys around here are trying them out, one by one. If you are interested I will be glad to send you the dope on what I have. Nothing extraordinary, I don't think, but a little different from what I've seen around here."

—73's Doug., W4TJU

RTTY's new correspondent—Ed.

RYRYRYRYRY

Florida Stations active on RTTY are W4EAS, W4EHU, W4DFU, W4GXL, W4RTJ, W4TJU.

Northeastern Stations active on RTTY are W1RBF, W1FGL, W1BDI and W1-BGW as well as W2PBG.

RYRYRYRYRY

"I followed up on the suggestion of your letter and called MARS—talked to a Major Long in the Pentagon building. He advised a batch of RTTY copy was submitted this year, about twice as many as last year—somewhere in the neighborhood of one hundred and fifty! Major Long is quite enthusiastic about having two way RTTY contacts next year."

—de W3PYW

RYRYRYRYRY

"VE3GL de F7BM KKKK. Incidentally the portion of F7BM copy that I am enclosing is nothing like as solid as was the two or three yards of it that I sent over to them—they really boiled in a signal over here." de VE3GL

Frequency 14,140 kcs—Ed.

"I have been on the air for about two months now, using a model 12 machine which has been giving me very good service. I am using a converter which is built along lines of the W2BFD job, complete with auto start and program selector unit. Of course, in true ham fashion, I have incorporated into it features of my own, none of which are anything new to the RTTY gang. My receiver is a HRO-50 and my transmitter is a home-brewed job running about 45 watts to a single 807 final."

—Ken, W1RBF

Send your version in as some of the gang may not have seen this set-up—Ed.

RYRYRYRYRY

"While I was there (Chicago) I picked up the power supply components I will need for the kilowatt. Found that Wells Sales Co. had a fine transformer giving 3000 volts at 500 mils. That ought to do the trick. I am tentatively planning to put the KW on the air around the first of September. Can't do it sooner since we spend July in Canada."

—Ed, W2BDI

RTTY is the Official Publication of the

RTTY Society of Southern California

and is published for the benefit of all RTTY Amateurs and Experimenters.

Permission to copy is granted provided credit is given.

For Information regarding the Society contact the following:
W6CLW—Ed Simmons
W6AEE—Merrill Swan
W6SCQ—Lewis Rogerson

For Traffic Net Information:
W6FLW W6IZJ

For "RTTY" Information:
W6CL W6CLW
W6DEO W6AEE

East Coast 80-Meter Traffic Net

An "East Coast" 80 meter radioteletype net now meets on Wed. evening on 3620 kc at 8 p. m. EDT. About an hour is spent checking stations into the net and moving traffic. About ten stations normally check in and normally about six messages are moved.

The following stations have been active in the net:

W1FGL, Al	Belmont (Boston) Mass.
W1BGW, Jack	Dorechester, Mass.
W1RBF, Ken	Plainville, Conn.
W2PBG, Bob	Bayside (NYC) N. Y.
W2JAV, Phil	Hammonton (Philly)
W2BDI, Ed	Merchantville, N. J.
W3PYW, Frank	Silver Spring, Md.
W3UWM, Ken	Pittsburgh, Pa.
W4TJU, Doug	Gaineville, Fla.
W4EHU, Don	Gainesville, Fla.
W8BL, Earl	Detroit, Mich.
W9TCJ, Bob	Williams Bay, Wisc.

Net control has been handled by W3PYW and W2JAV. Others will take over net control as experience is gained.

Although the net is called "East Coast" it will be noted that it extends as far west as the Chicago area. This has already suggested that the net be divided (at about Detroit) into two nets. The second net would probably meet at about 8 PM CDT. Anyone interested in moving traffic is invited to report into the net.

Traffic Net News

EMILE DUVAL, W6FLW

The RTTY Society of Southern California Net operates every Tuesday evening at 8:00 p. m. on 147.85 mc.

Activity for the Month of April, 1954

April 6—W6FLW, N. C.—14 Checkins

W6AEE	W6ZBV
W6CL	W6ICS
W6EV	W6CYR
W6FLW	W6IIV
W6IZJ	W6CAP
W6SCQ	W6TRX
W6NWM	W6NAT

April 13—W6IZJ, N. C.—12 Checkins

W6AEE	W6KNI
W6CAP	W6RL
W6CLW	W6SCQ
W6DEO	W6WYH
W6EV	W6NAT
W6IZJ	W6KNI

April 20—W6IIV, N. C.—14 Checkins

W6AEE	W6DEO
W6CAP	W6IIV
W6CG	W6KNI
W6CL	W6WYH
W6CLW	W6SCQ
W6EV	W6ZBV
W6FLW	W6IZJ

April 27—W6FLW, N. C.—17 Checkins

W6AEE	W6PNW
W6CAP	W6RL
W6CL	W6SCQ
W6CMQ	W6UPY
W6DEO	W6WYH
W6DMK	W6ZBV
W6EV	W6KNI
W6IIV	W6FLW
W6IZJ	

RTTY Society Meeting May 21st

The regular meeting of the RTTY Society of Southern California was held at the Western Gear Works plant in Lynwood, California on May 21st, 1954.

Before the meeting started those that were on hand lined up before a camera and had their picture taken (shown below). Many others showed up later and did not get a chance to be in the picture, which we regret very much.

The meeting started at 8 p. m. with Merrill Swan, W6AEE, acting as General Chairman.

A talk and demonstration was given by Cecil Crafts, W6ZBV on his Frequency Meter Terminal Unit (described in this issue on page)5.

Usual business and Net discussion was the order of the evening after which coffee and donuts were served. After the meeting the members broke up in small groups and were escorted through the mamoth plant of the Western Gear Works which lasted about 2 hours. The trip proved to be quite an eye opener for all concerned. We wish to thank W6OJF for this remarkable evening.

First Row: Art Addaway, W6LSG, W6CND, W6EV, W6AEE
Second Row: W6RZ, W6PZV, W6CL, W6NAT, W6ILW
Third Row: W6EGZ, K6CHU, W6FLW, W6WYH, W6CNM, W6IEU, W6MRO
Last Row: W6UPY, W6DYW, W6LDG, W6ZBV, W6IIV, W6OJF (Host)

. . . . Do you copy Walt and how are things—have only work BYB and LKK so far but was having trouble with final amp yesterday—so what sa, were you on yesterday—W8HP de W8GWA

* * * *

. . . . Good morning and thanks for the call. Name here is Cecil, W8GWA, W9-CNN de W8GWA. Good monring Cecil, name here is also Cecil but never go by that name so Dick is it... That is the middle name and have used it for some twenty years. . . . .

* * * *

. . . . W8ZM Detroit de W1BGW, Boston, Mass. Good afternoon Bob, and how do you copy me this afternoon? Guess condx only working between Boston and Detroit today! Had a QSO with Earl before. Have a sked with VE2ATC but no hear, so what say Bob? . . . .

* * * *

. . . . W9TCJ de W3PYW. You with us Bob? So far we have reported in the Net W2PBG, W4TJU, W2JAV. Any other stations wish to check in? . . . .

* * * *

. . . . Well I guess I used enough of your paper for this time so back to you there Earl. W8BL de W2PBG, Bayside, LI NY.

. . . .W1BGW es W2JAV es W2BDI de W2PBG, Bayside, LI NY. Roger and solid on all the xmissions. Good morning Jack and nice to hear you agn . . . .

* * * *

. . . . Solid Bud and OK on being a fugitive from a lawn mower today. Well that was interesting about your copy on the Armed Forces Day message. I was afraid of NDW2 because of last year they came in so poorly here and there was such a lot of QRM that I didnt want to take a chance on a repetition this year so I paid most attention to 14 mc and got perfect on A5USA. Dont know where he is but think in TEXAS. Also went after NDW and perfect on him — W6CG de W6DOU with W7CO on side.

* * * *

. . . . And we only work with 60 cycle stuff there. Radio is just a hobbie with me. W1BGW de W1RBF.

* * * *

. . . . This is NDW2 Testing, Testing, Testing, NDW2 NDW 2 Testing RYRY RYRYRYRYRYRYRYRYRYRYRYRYRYR RYRYRYRYRYRYRYRYRYRYRYRYRYR

* * * *

. . . . Been varnishing my little boat and hands still kinda sticky hi. Been carrying on a sked with Bart, W6OWP for 1230 PST and worked him OK on Tuesday. Wasnt home for lunch today so missed him but will try again tomorrow. There is lots of possibilities on twenty RTTY if the fellows will just try it. I am sure. Well Merrill if you are in the middle of the labors for the good of the old RTTY gang dont let me interrupt you and will if I can snag one of those W5's that is on.—W6AEE de KL7CK. K

* * * *

. . . . Wonder what this frequency is going to sound like when they get ten thousand RTTY machines going all at the same time. W6UPY de KL7CK.

. . . . W6AEE and W6CG this is W6OLC in San Gabriel returning. Well fellows fine copy all around guess I will get used to this in time of course, right now I have all the connections all over the place. Have to really have three arms to make sure that everything is thrown on time and also my typing is rusty which should improve in time. Am trying to maintain the touch system in favor of the hunt and peck arrangement.

* * * *

. . . . If QRM leaves you alone I may be able to print solid. So go ahead and give me a shot and lets see what happens. I worked W2BFI for a small minute about an hour ago. W2JAV de W6UPY.

* * * *

. . . . My name is Betty. I work for Crown Cork and Seal in LA and run the TT between our office and San Francisco twice a day so I am not a full time TT operator. Well Bud does the thing still copy query. W6CG de W6FGS, Alhambra

* * * *

. . . . Nice to see punctuations on this thing instead of all those fractions! — Looks like the little lady wants me to take care of the cats, etc. and make for the hay so back to you Merrill W6AEE de W6DEO.—Ga.

* * * *

. . . . W9CNN, W9CNN, W9CNN on 80 meters de W6AEE, W6AEE, Pasadena, California.

* * * *

. . . and speaking of the 80 meter band in general . . . 80 meters is a fine RTTY band in this area. Lots of fellows work RTTY on and around 3620 in spite of those spanish stations. W3PZW puts in a very consistent signal—He sure has wonderful signals. Also the Detroit Detroit gang W8ZM, W8BL, W8GWA, etc. W8AV, W8IJV, etc. and of course W2JAV and W3PYW and W1AW, W2-PAT, W1BGW. All of these stations populate the 80 meter band.

. . . . Say Bob, how about swapping a card with you. The idea is a few of us decided to drum up interest in RTTY. We would revive the WAS idea for RTTY and see if some competition wouldn't stir up some activity so I am now starting from scratch, hi. So your my first Texas RTTY contact. I havent sent QSL cards for years but guess I am about to get back into it hi. My QTH is: 5226 North Willmonte Ave., Temple City If you have no cards just send a verification at your convenience, Bob and get the gang started on the idea and lets see if we cant get some business started on RTTY . . . .

* * * *

. . . . W6AEE de W9TCJ Roger. That was swell copy Merrill . . . . land line all the way through.

* * * *

. . . . W7LPM de W6LDF. Roger and I worked only one other and that was W8ZM one way, hi..

* * * *

. . . . W1BGW, Dorchester, Mass. with W7LPM on side de W6AEE. Good evening Jack and Bennie or rather Dick and Jack. Just got your FB letter today Jack Swell on the photos. Will use them in either April or May issue. FB. And sure glad you are coming in out here today. Also would like for you to meet W7-LPM, Dick up at Seattle who is on this same frequency. So after you OK my msg. I hope—then give me yours. Will return this tape so QRX one.

* * * *

. . . . You might mention it to him the next time you talk to him. Think I fouled up his call judging from my local copy. That was K6FCT up at Hamilton AF Base. W6AEE de W7KWB in Phoenix, Arizona. AR KKK

* * * *

. . . . W6AEE de W6VYI OK now. Copy you very good now—can't understand it had you tuned in OK at first then all of a sudden no good, but copy you fine now.